Product data sheet
Characteristics

XPSMCMRO0004
4 safety relay output expansion with backplane connection with screw term

Product availability: Stock - Normally stocked in distribution facility

Price*: 659.00 USD

Main

Range of product	Preventa Safety automation
Product or component type	Safe relay output module
Device short name	XPSMCM
Electrical connection	Screw terminal

Complementary

Maximum power dissipation in W	3 W
Integrated connection type	Backplane expansion bus
Quality labels	CE
Quantity per set	1
Switching time	12 ms
Minimum switching current	20 MA
Maximum switching current	6 A
Width	0.89 In (22.5 mm)
Height	3.90 In (99 mm)
Depth	4.51 In (114.5 mm)
Net weight	0.66 Lb(US) (0.3 kg)

Environment

Standards	IEC 62061 EN/ISO 13849-1 EN/IEC 61800-5-1 EN/IEC 61508
Product certifications	TÜV RCM cULus
Ambient air temperature for operation	14…131 °F (-10…55 °C)
Ambient air temperature for storage	-4…185 °F (-20…85 °C)
Pollution degree	2
Overvoltage category	II

The information provided in this documentation contains general descriptions and/or technical characteristics of the performance of the products contained herein.
This documentation is not intended as a substitute for and is not to be used for determining suitability or reliability of these products for specific user applications.
It is the duty of any such user or integrator to perform the appropriate and complete risk analysis, evaluation and testing of the products with respect to the relevant specific application or use thereof.
Neither Schneider Electric Industries SAS nor any of its affiliates or subsidiaries shall be responsible or liable for misuse of the information contained herein. *Prices are indicative

Electrical durability	20000000 Cycles
Mechanical durability	20000000 Cycles
Service life	20 Year(S)

Ordering and shipping details

Category	22477 - SAFETY MODULES (PREVENTA)
Discount Schedule	SAF2
GTIN	3606480748899
Nbr. of units in pkg.	1
Package weight(Lbs)	10.37 Oz (294 g)
Returnability	Yes
Country of origin	IT

Packing Units

Unit Type of Package 1	PCE
Package 1 Height	1.81 In (4.6 cm)
Package 1 width	4.80 In (12.2 cm)
Package 1 Length	6.30 In (16 cm)
Unit Type of Package 2	S01
Number of Units in Package 2	6
Package 2 Weight	4.39 Lb(US) (1.991 kg)
Package 2 Height	5.91 In (15 cm)
Package 2 width	5.91 In (15 cm)
Package 2 Length	15.75 In (40 cm)

Offer Sustainability

Sustainable offer status	Green Premium product
California proposition 65	WARNING: This product can expose you to chemicals including: Lead and lead compounds, which is known to the State of California to cause cancer and birth defects or other reproductive harm. For more information go to www.P65Warnings.ca.gov
REACh Regulation	REACh Declaration
REACh free of SVHC	Yes
EU RoHS Directive	Pro-active compliance (Product out of EU RoHS legal scope) EU RoHS Declaration
Mercury free	Yes
RoHS exemption information	Yes
China RoHS Regulation	China RoHS Declaration
Environmental Disclosure	Product Environmental Profile
Circularity Profile	End Of Life Information
WEEE	The product must be disposed on European Union markets following specific waste collection and never end up in rubbish bins.
PVC free	Yes

XPSMCMRO0004

Dimensions

Screw Terminal

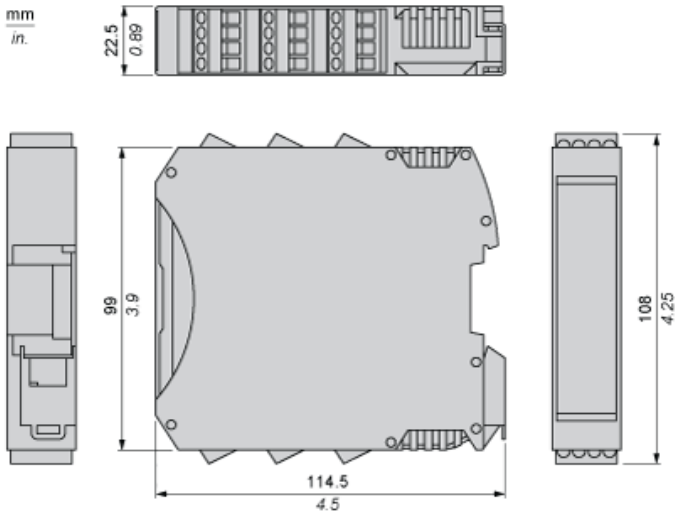

Mounting Safety Controller CPU with Module(s)

Mount BackPlane Connector on Rail

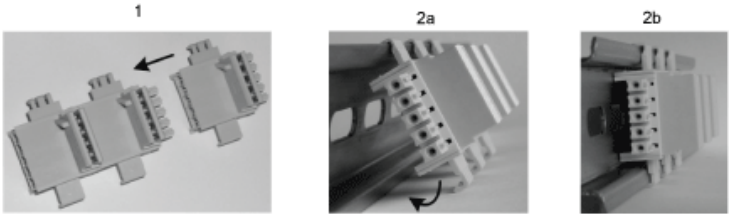

1 : Connect as much Backplane Connector as module to be install.
2 : Fix the connectors to the rail (Top first).

Mount Safety Controller CPU with Other Module(s)

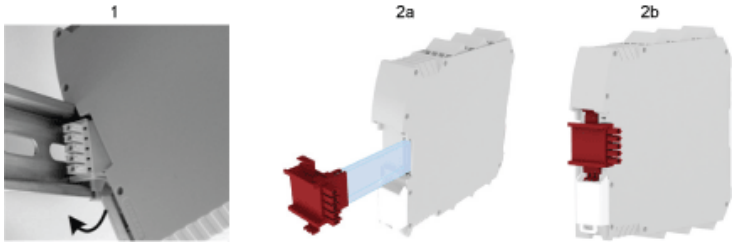

1 : Mount controller CPU and modules on rail.
2 : Make sure that the controller CPU or the module(s) are plugged on the BackPlane connector.

Wiring

Category 2 Wiring

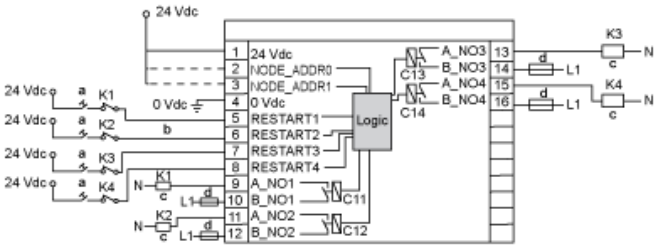

a : Restart
b : Feedback
c : Load
d : Fuse

Category 4 Wiring

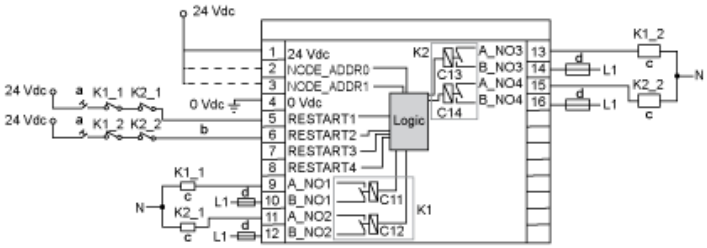

a : Restart
b : Feedback
c : Load
d : Fuse

Product Life Status : Commercialised